uPVC WINDOWS MAINTENANCE MANUAL

VENTA WINDOWS

Avoid damage caused by corrosion and debris:

- Corrosive materials, dirt and moisture may damage hardware components and cause hazards.
- Do not use acetic or acid-releasing sealants.
- Do not use the hardware components in environments where the air contains aggressive or corrosive components.
- Keep all rebates free of debris and dirt, especially cement and plaster residue.
- Keep the hardware dry.

Clean hardware gently:

- Only clean the hardware with a soft cloth and mild, diluted pH-neutral cleaning agents.
- The hardware must not be exposed to abrasive cleaners or aggressive, acidic cleaning agents.
- Leave the hardware to dry after the cleaning process.

Maintenance of windows ironmongery:

- Check that all safety-relevant hardware components are secure and check for wear.
- Check that the hinge pins are pushed in all the way to the stop. If this is not the case, push them upwards all the way to the stop by hand and secure them with the corresponding safety screws (according to the hardware)!
- Check for loose fixing screws and check that the handle is secure. Tighten loose fixing screws using an appropriate tool. Attention: Do not overtighten the screws!
- Replace any worn/defective hardware components or over¬tightened screws as soon as possible!
- Grease or oil all movable hardware components and all locking points. Use only acid-free and resin-free oil or grease.
- Regular checks and adjustments should be performed to ensure good performance and long service life.

Interval	**Maintenance**
At least annually*	Check that hardware components are firmly seated and examine them for appearances of wear and tear. If necessary, tighten fixing screws and get a specialist company to replace worn components.
	Lubricate all moving and locking points of the hardware, and check for faultless functioning.

* every six months for school and hotel buildings.

- Use a grease spray on the movable parts in the window sash and spray into all openings in the hardware. Then move the hardware into position several times until the grease is distrib¬uted.
- Wipe off any excess oil or grease. Grease the striker plates in the window frame using a firm grease (consistency class 2 according to DIN 51818) in those places where the locking cam engages with the striker plate.

Maintenance, cleaning and surface protection:

- Remove any stains or spills immediately because they could impair functioning and damage the surface protection of the hardware.
- Use only mild, pH-neutral, diluted cleaning agents.
- Never use sharp objects, abrasives or aggressive cleaning agents (such as vinegar or acidic cleaning agents) as they could damage the corrosion protection of the hardware.
- When cleaning, ensure that no water runs into the hardware.
- Dry the hardware thoroughly after cleaning and oil the surface with a non-acidic and non-resinous oil by wiping it with an oil-impregnated cloth.
- Check the gaskets are clean, dry, continuous and undamaged. Rub the gaskets with sealing agent twice a year. Damaged seals must be replaced.
- From time to time a control of the drainage holes in the frame is necessary. A perfect drainage is only provided if the openings are kept clean.
- Wipe or brush clean all uPVC frame surfaces with recommended profile cleaner. For normal cleaning of the frame surface use a solution of mild dishwashing liquid. Do not use scouring agent or paint thinner. For stubborn dirt always use special cleaning agents that can be obtained from the uPVC window supplier or from a window specialist. Agents like diluted nitro, benzine or similar are to be avoided.
- Check the handles move freely and smoothly. If they are stiff, carefully use a recommended lubricant on the locking tongues/bolts while in their extended position.

VENTA WINDOWS uPVC care set is particularly suited for the full maintenance of windows. You can order it from us, contact your Key Account Manager or Dealer.

TOOLS

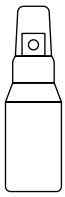

1. Fittings care agent.
   Use only acid-free and resin-free oil or grease or similar from VENTA WINDOWS care set for lubrication of ironmongery.

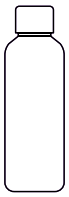

2. Gaskets care agent.
   Silicon oil or similar from VENTA WINDOWS care set.

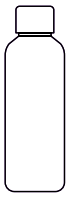

3. uPVC profile cleaner.
   For stubborn dirt removal. Can be obtained from VENTA WINDOWS care set.

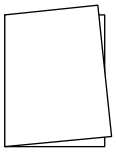

4. Cloth.

INSIDE OPENING WINDOWS

Check that all fittings ( ) are secure and check for wear.

- Check that the top hinge pin (x) in pushed in up to the stop. If it is not, slide it up to the stop manually.
- Use a grease spray on the movable parts in the window sash and spray into all openings in the fittings. Then move the fittings into position several times until the grease is distributed. Wipe off any excess oil or grease.
- Grease the striker plates in the window frame using a firmer grease (consistency class 2 in accordance with DIN 51818) in the places where the locking cam engages with the striker plate.

Tilt Before Turn (TBT) windows. Visible/Invisible hinges.

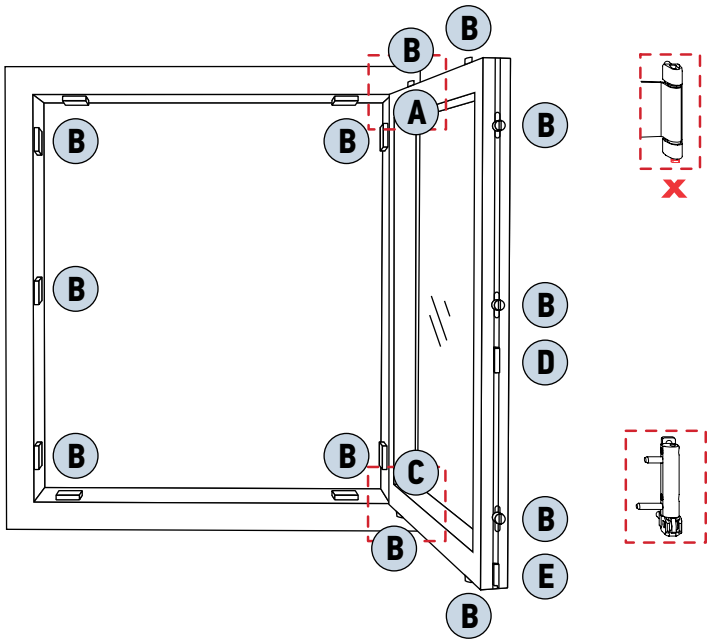

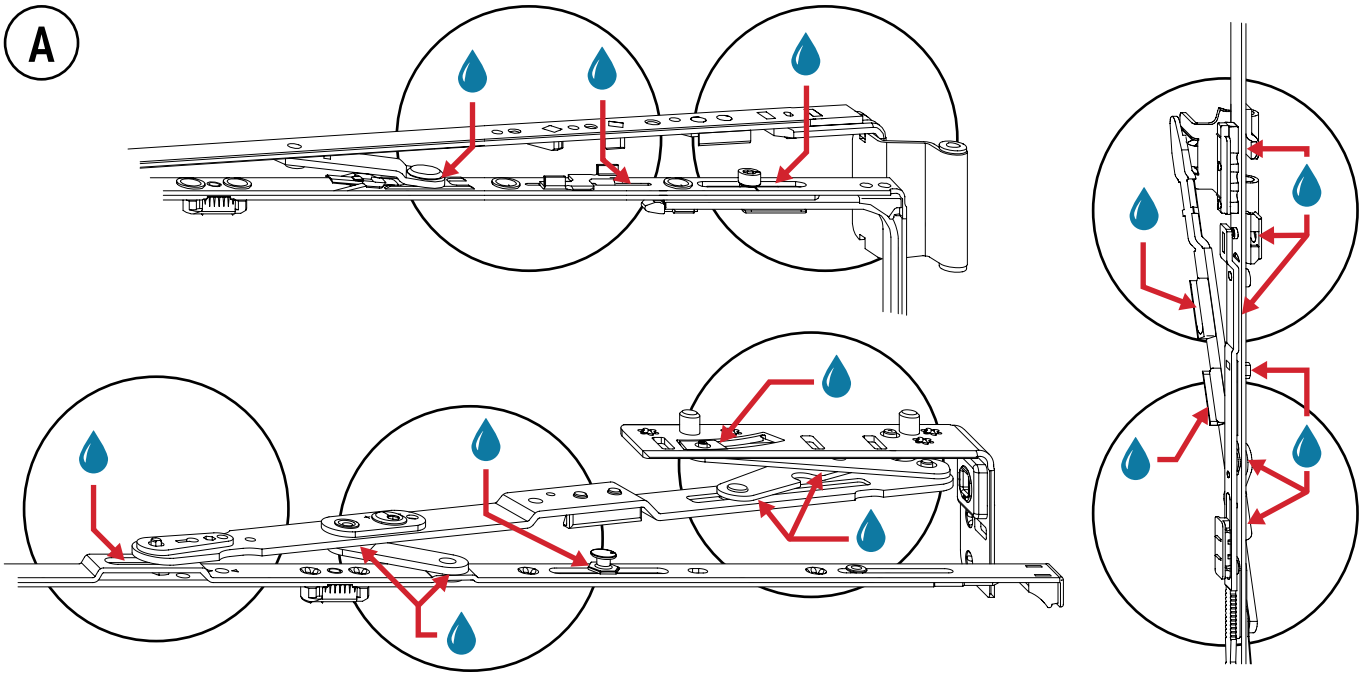

B

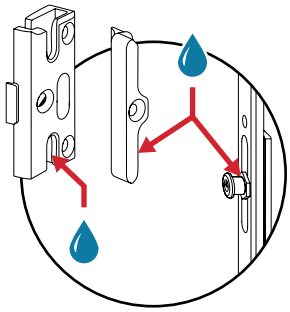

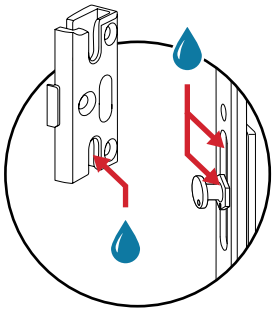

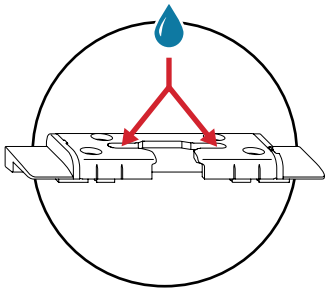

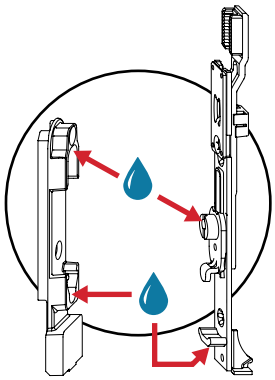

C

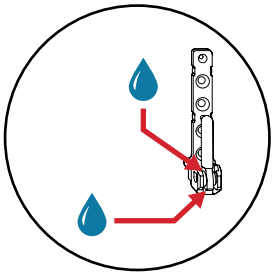

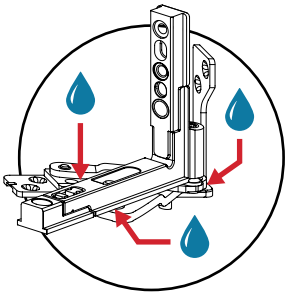

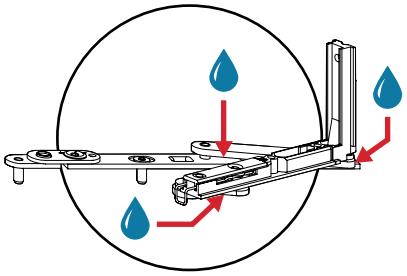

D

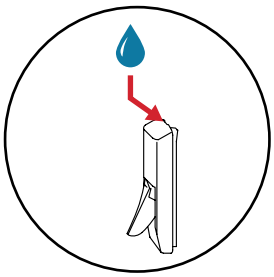

E

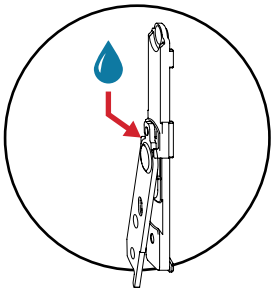

Kipp windows

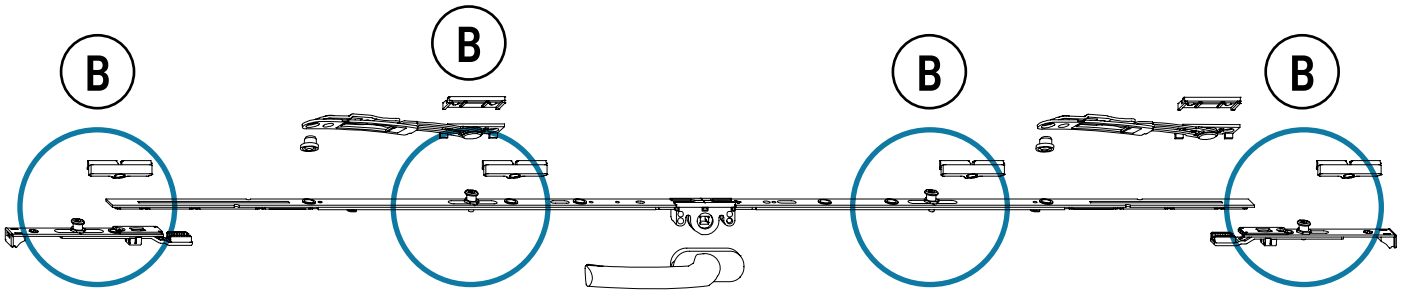

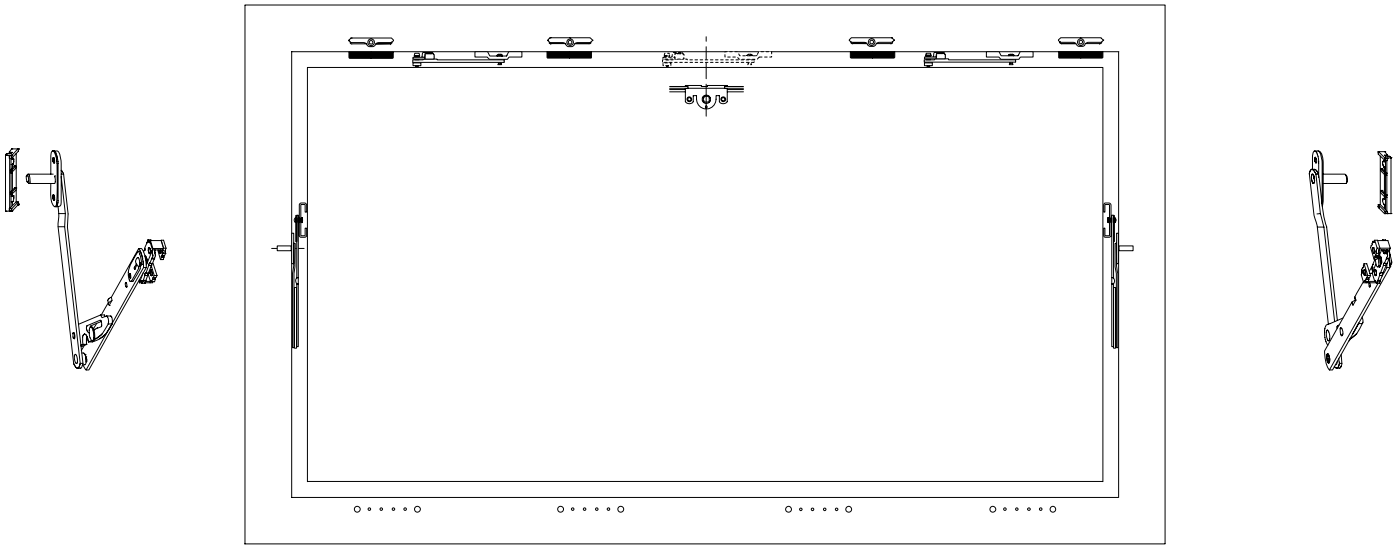

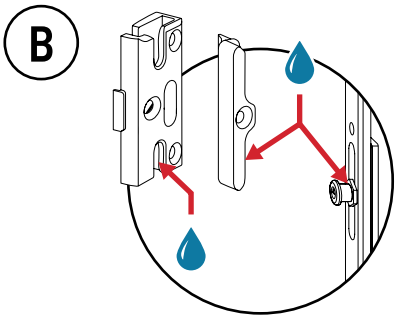

OUTSIDE OPENING WINDOWS.

Top-Swing window. Top-Tech hinges.

STEP 1 Open the window into the cleaning position.

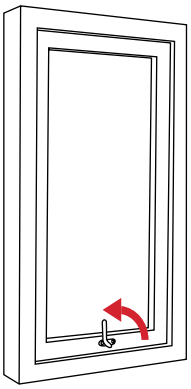

1. Turn the handle into the OPEN position.

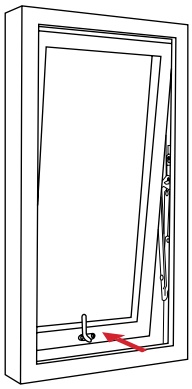

2. Push the sash outwards till the restrictor stops the sash.

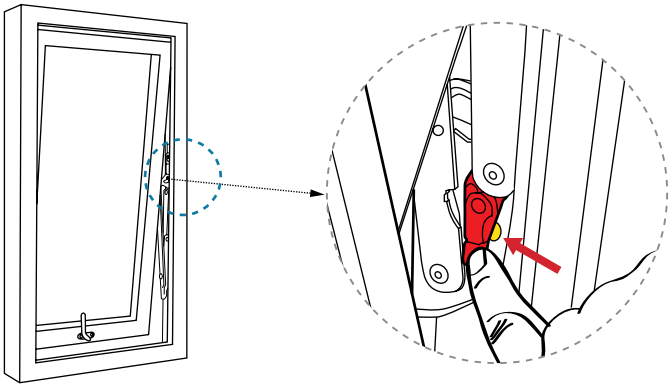

3. Push safety restrictor lock away from you (located in side of the frame), gently push window sash out.

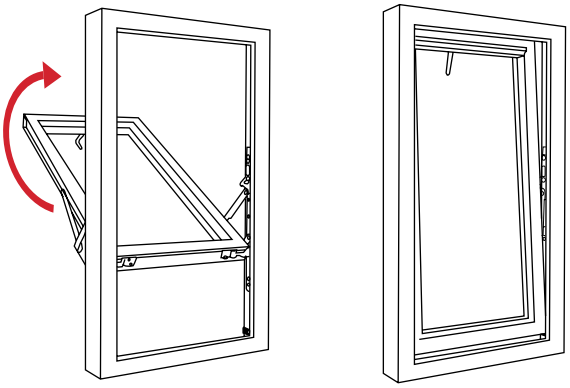

4. Continue opening the sash out until fully reversed and locks securely in cleaning position.

STEP 2 Carefully apply recommended lubricant to the safety restrictor hinges. Move sash up and down to distribute evenly in the mechanism.

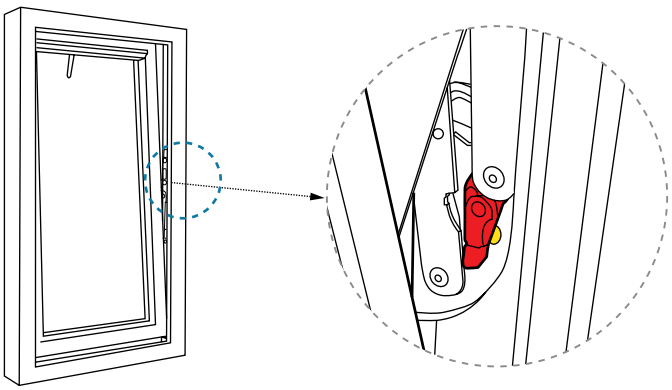

STEP 3 Carefully apply recommended lubricant into rail. Turn sash fully to ensure an even distribution of lubricant (view from outside).

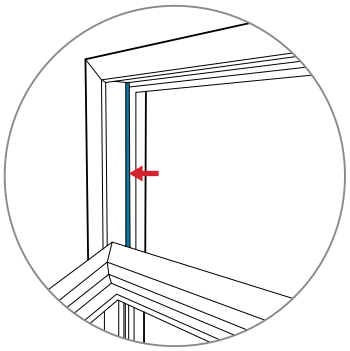

STEP 4 Lubricate all cams/tongues and strikers on the sash sides as indicated on the drawing.

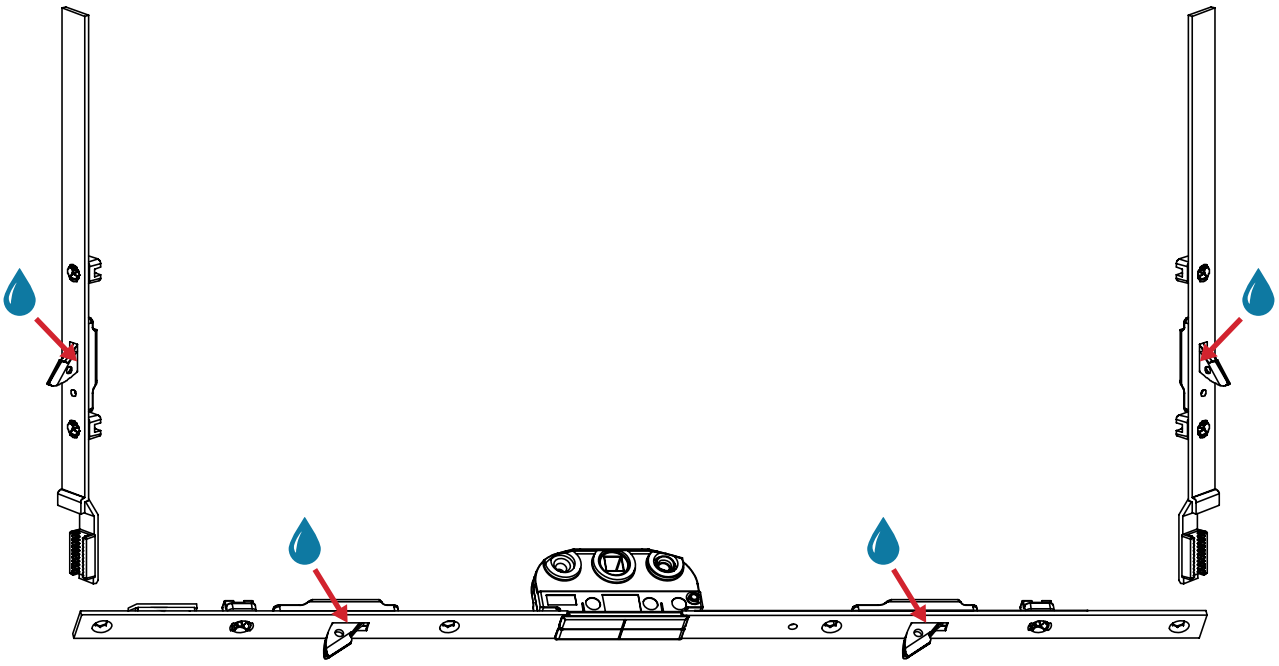

Side hung/Top hung windows

Lubricate all cams/tongues and strikers on the sash sides as indicated on the drawing at least once a year with acid-free grease. Well lubricated tongues and strikers minimize wear and tear, and ease operation.

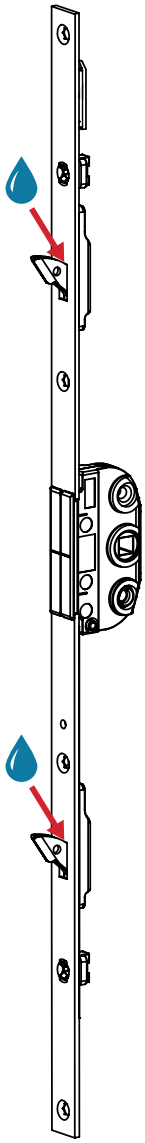

Side hung

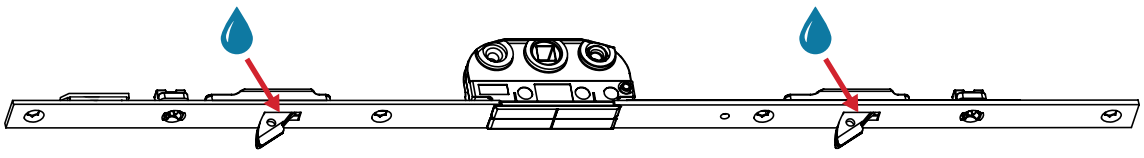

Top hung

For aditional information check instalation instructions:
https://ventawindows.com/support/installations/#doc-windows

VENTA WINDOWS
+47 63 000 900
www.ventawindows.com
info@ventawindows.com